ORTAL
YOUR LIFE. YOUR FIRE

170H RS

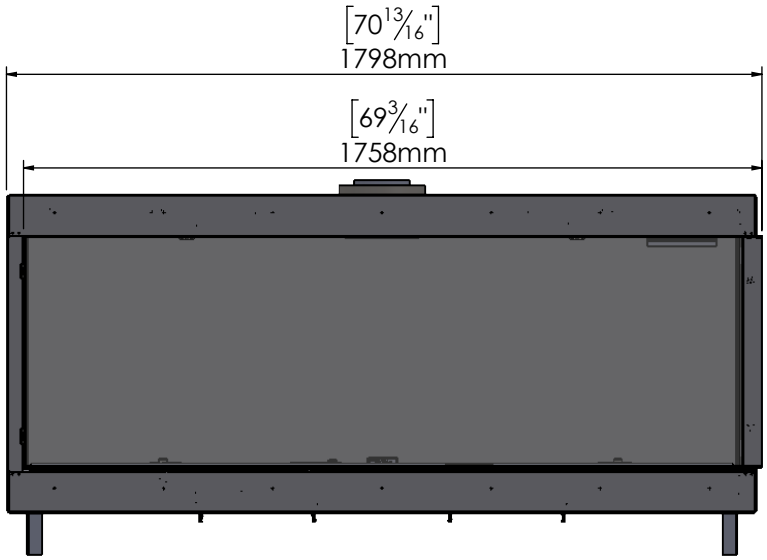

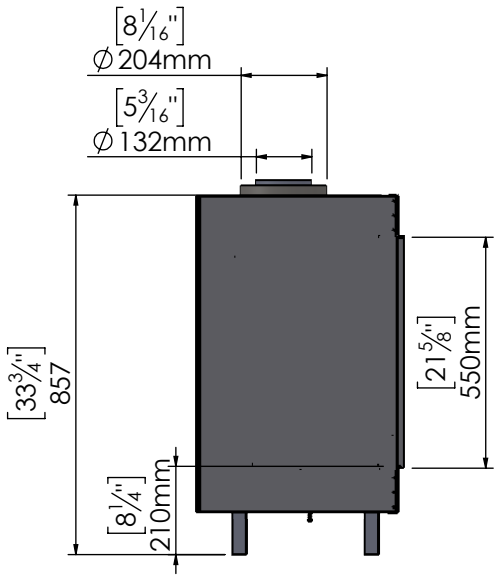

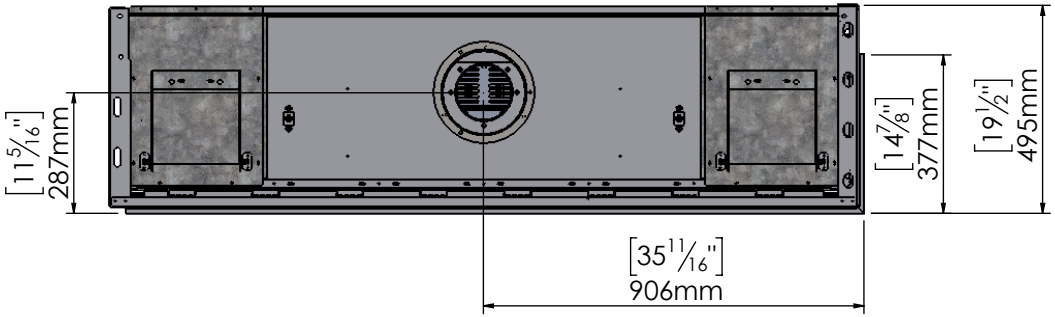

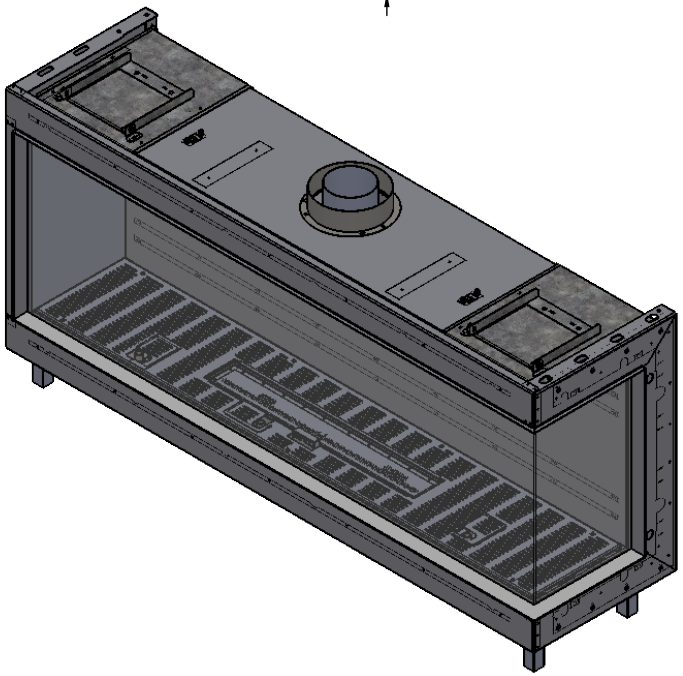

2/14/2021