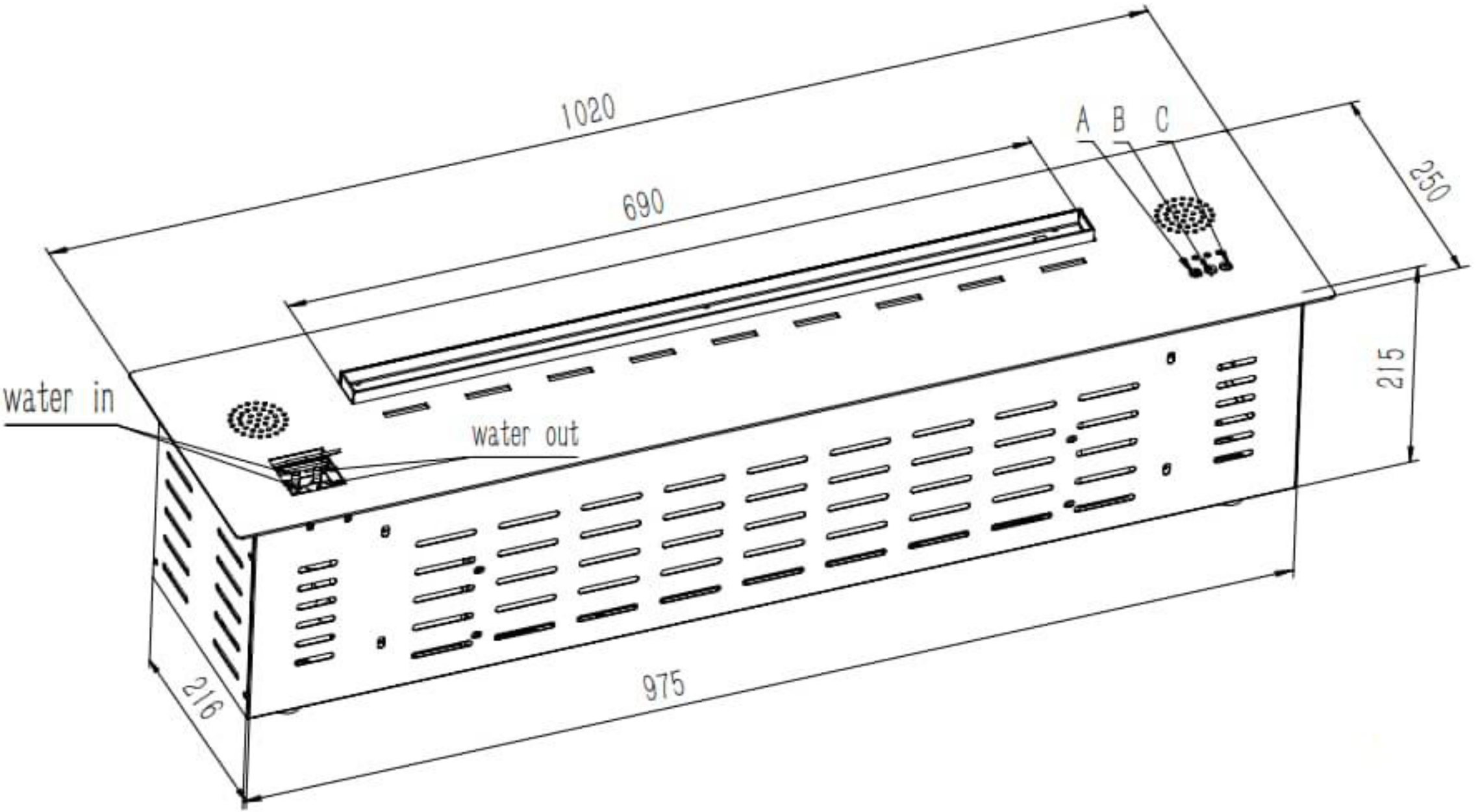
1020
690
A B C
250
215
water in
water out
216
975

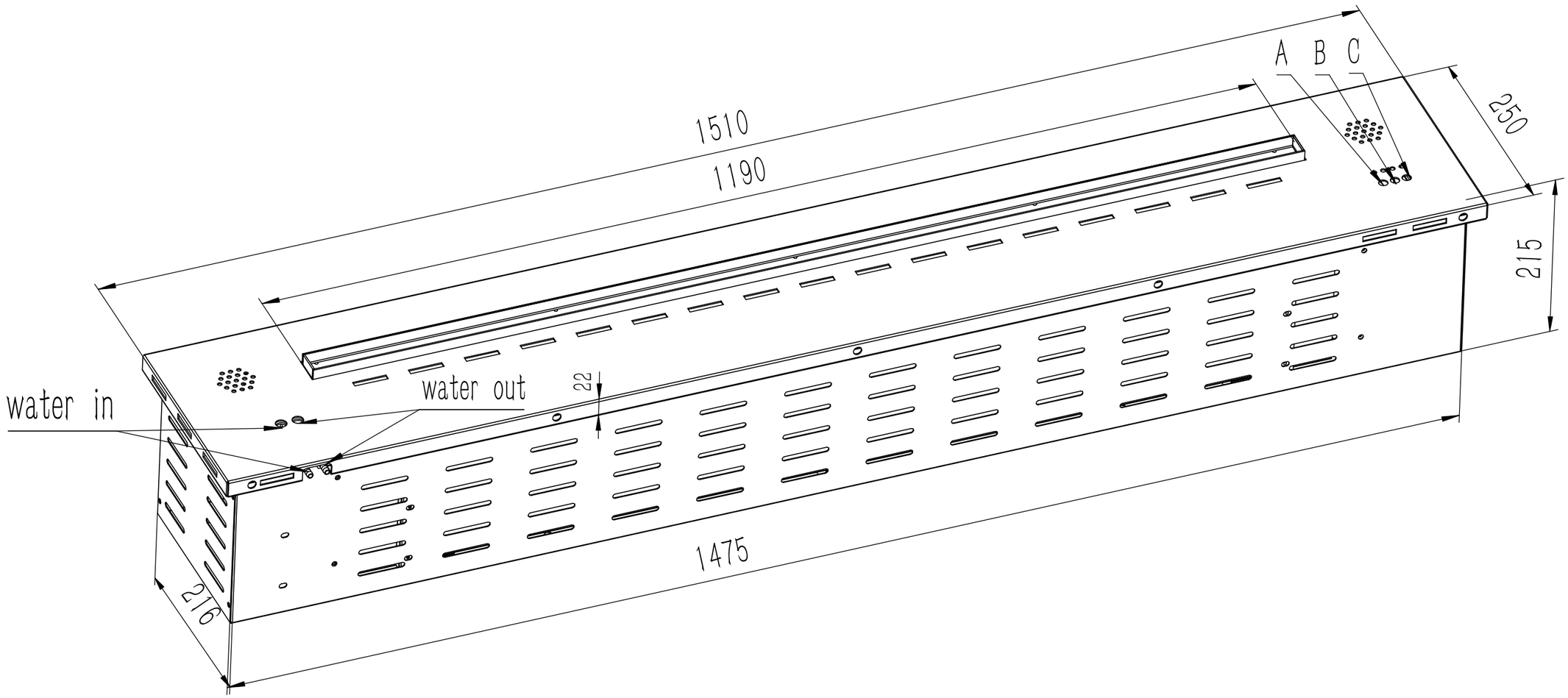
1510
1190
A
B
C
250
215
22
water in
water out
1475
216

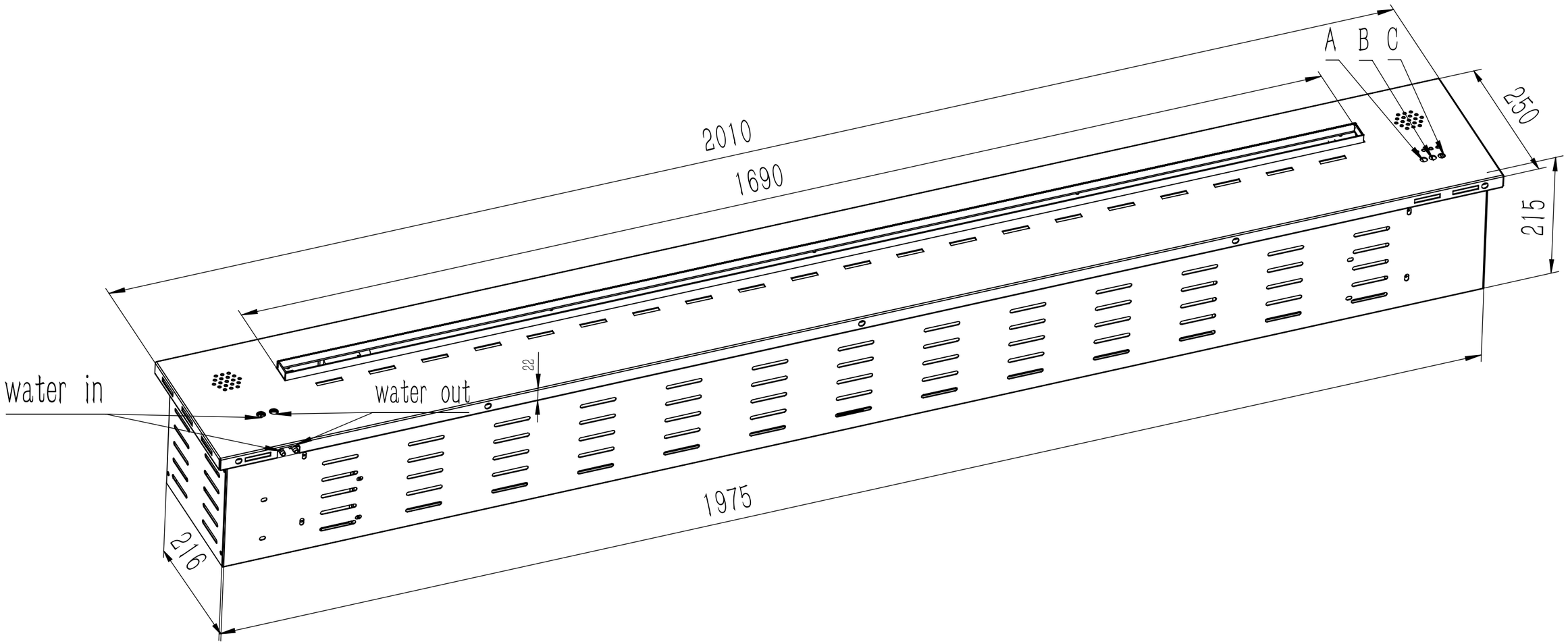
A
B
C
2010
1690
250
215
22
water in
water out
1975
216