ORTAL
YOUR LIFE. YOUR FIRE

170 TS

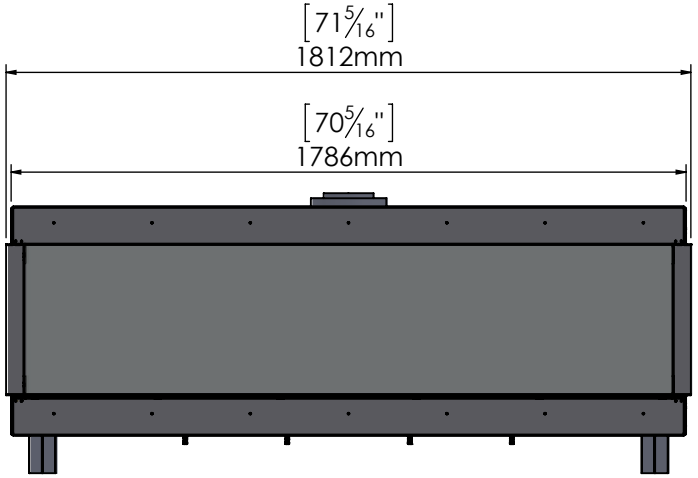

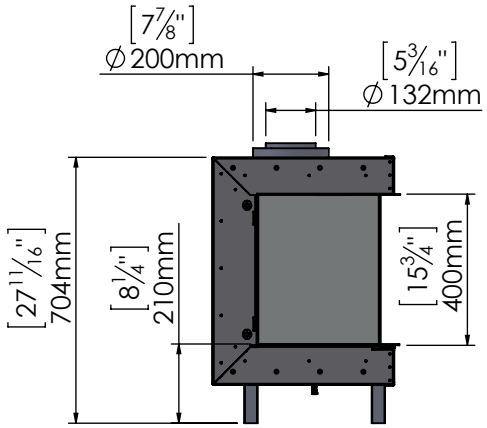

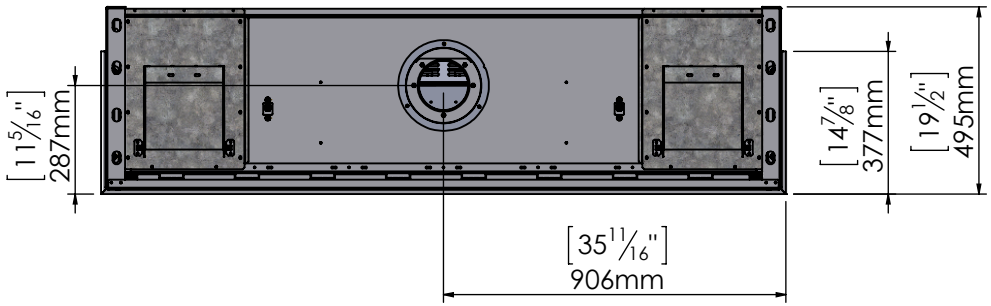

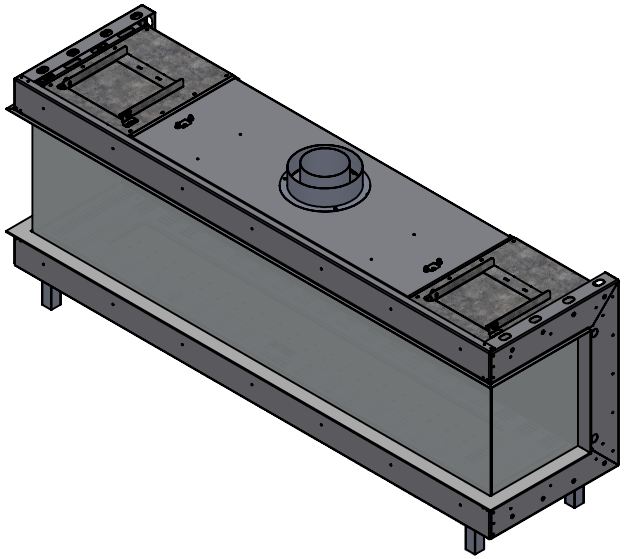

2/5/2018