ORTAL
YOUR LIFE. YOUR FIRE

170 LS

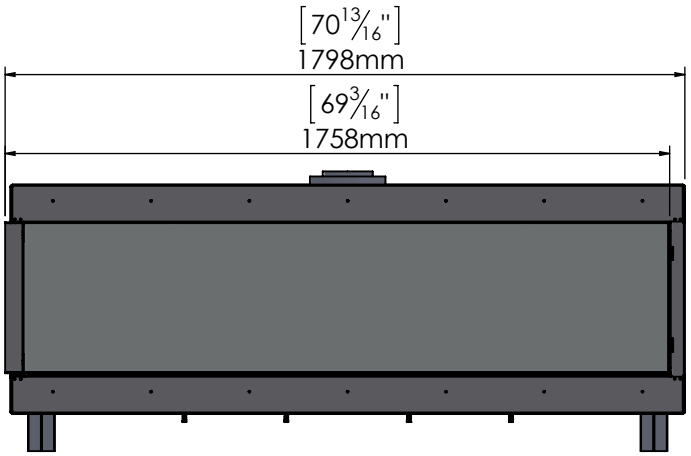

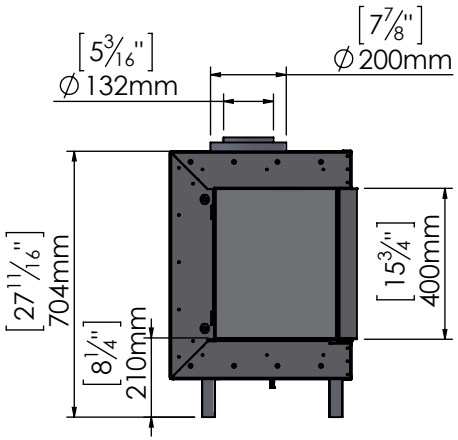

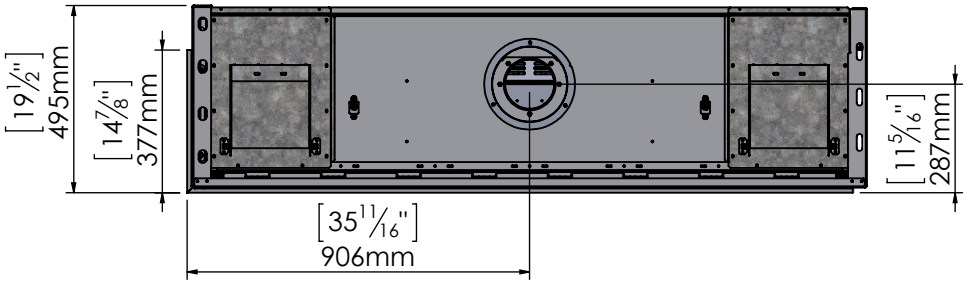

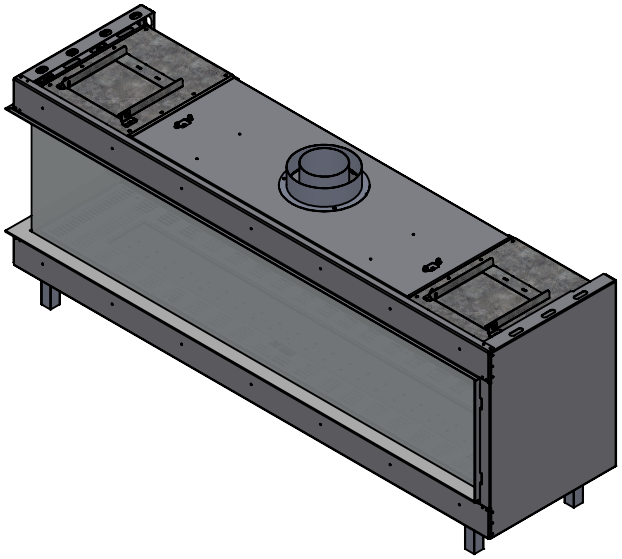

2/5/2018