ORTAL
YOUR LIFE. YOUR FIRE

150 LS

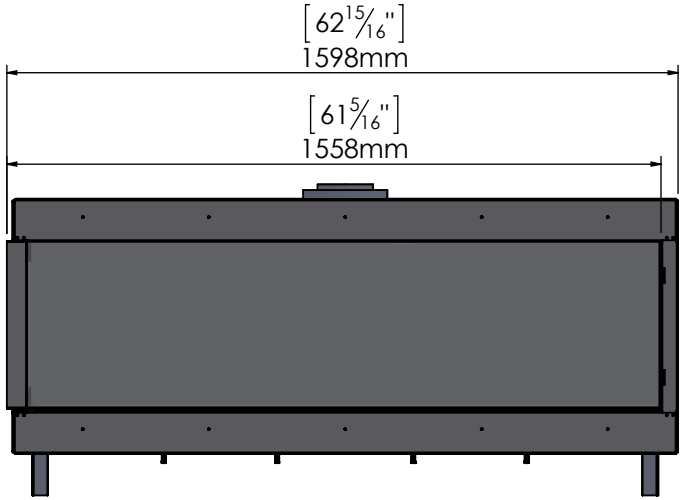

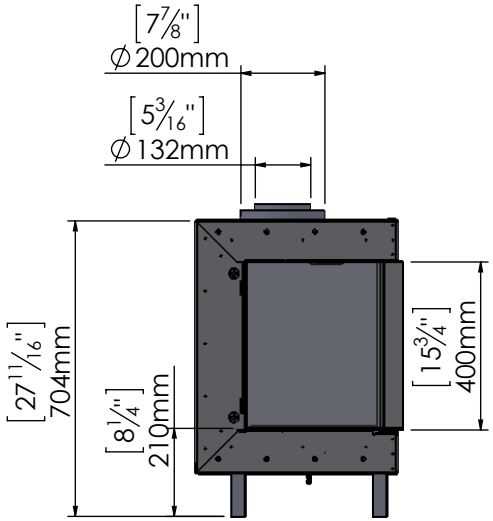

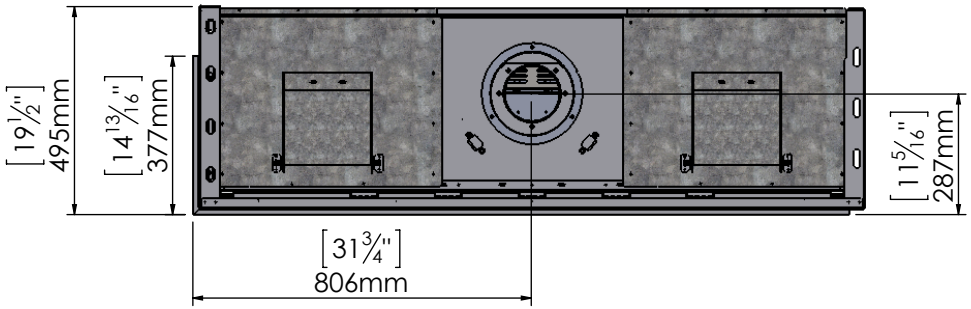

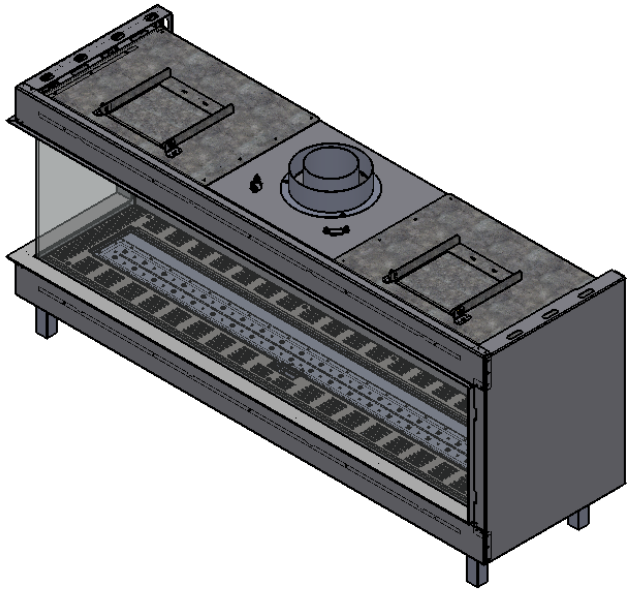

11/20/2017