ORTAL
YOUR LIFE. YOUR FIRE

130 TS

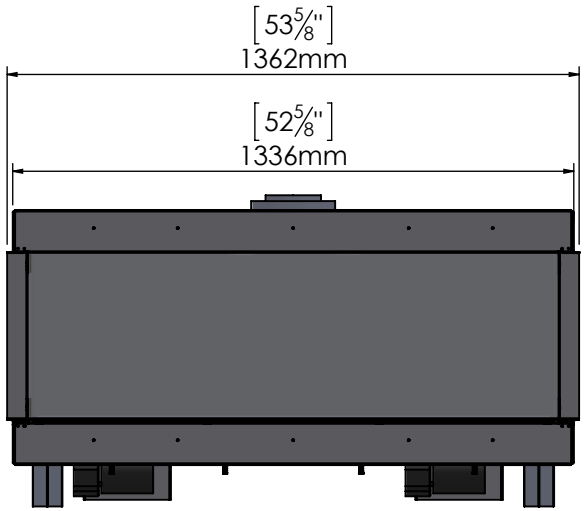

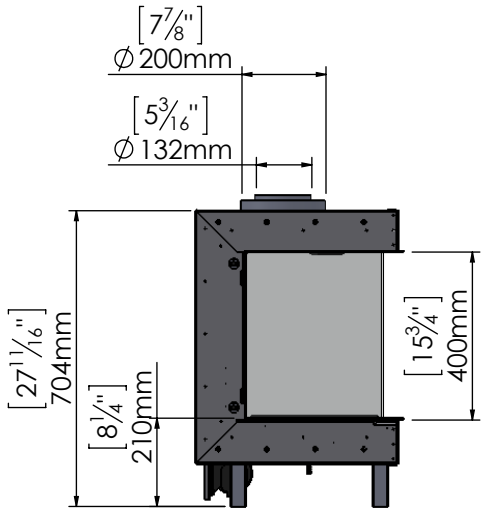

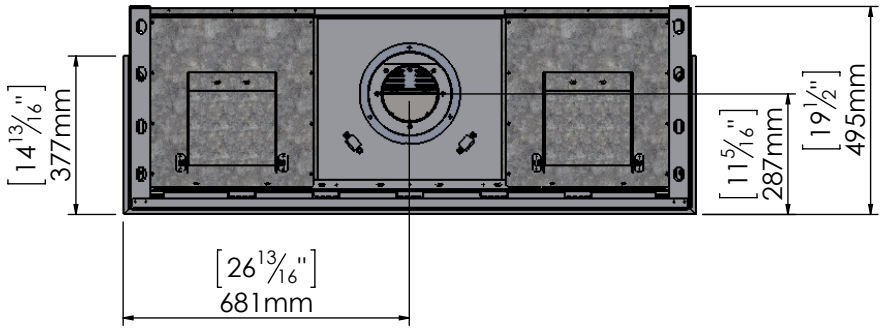

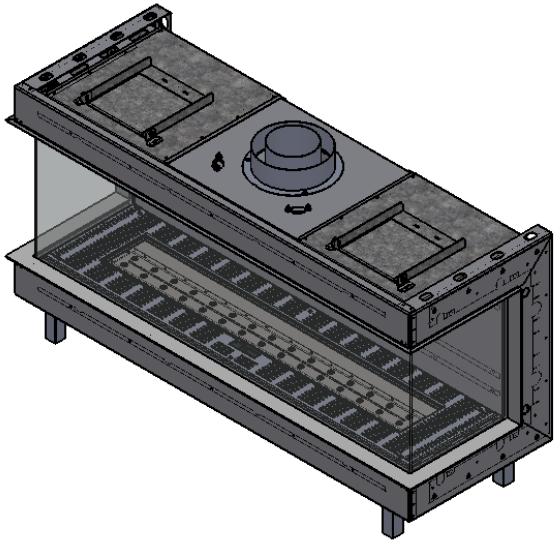

1/31/2018