ORTAL
YOUR LIFE. YOUR FIRE

110 LS

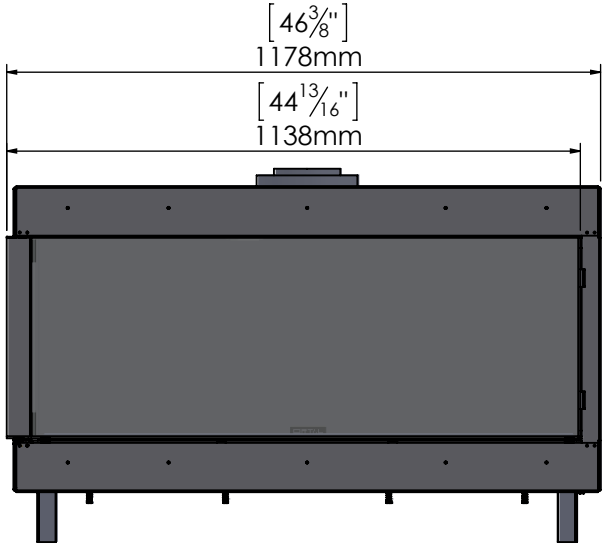

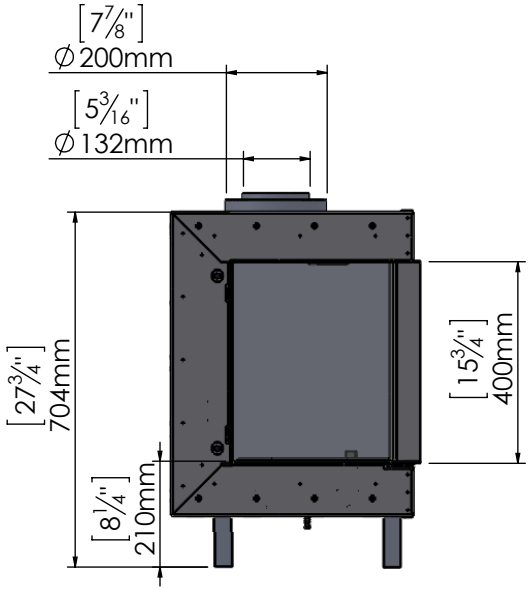

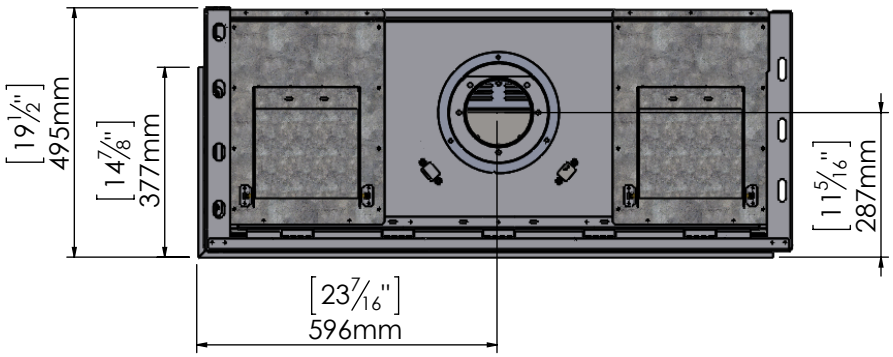

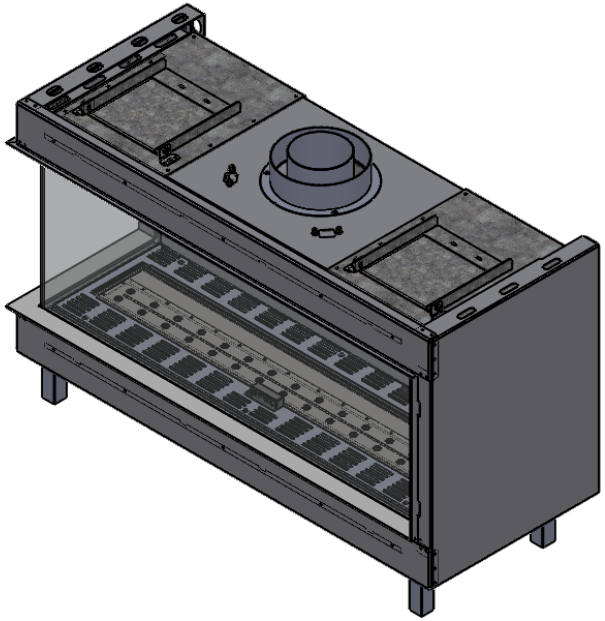

11/5/2017